Interstate Shields

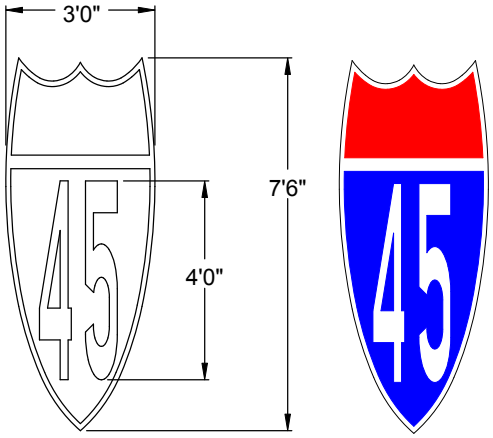

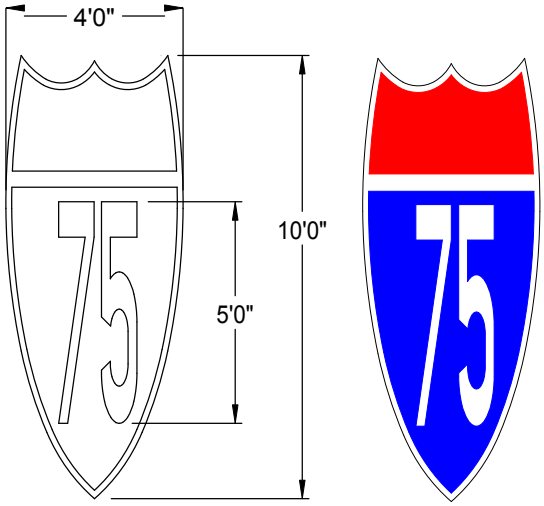

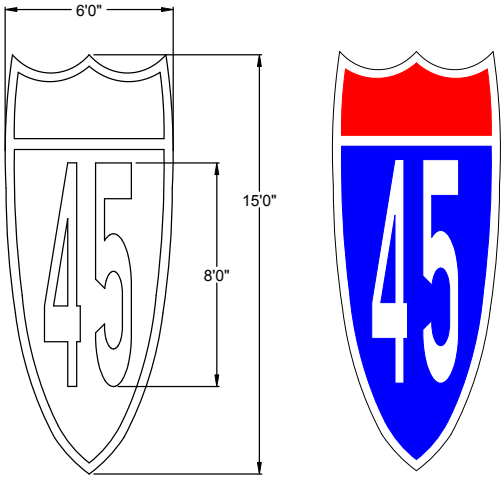

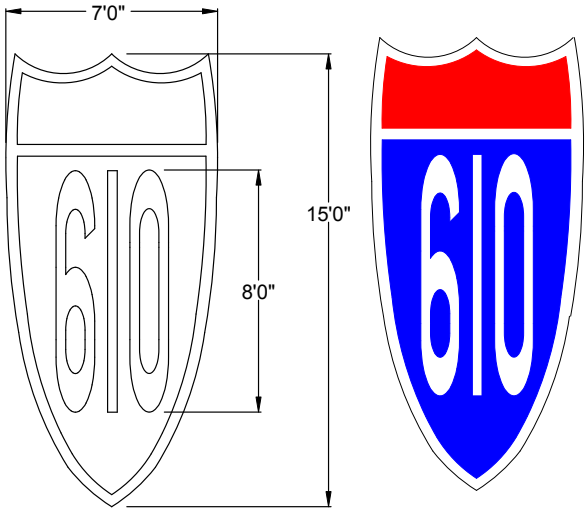

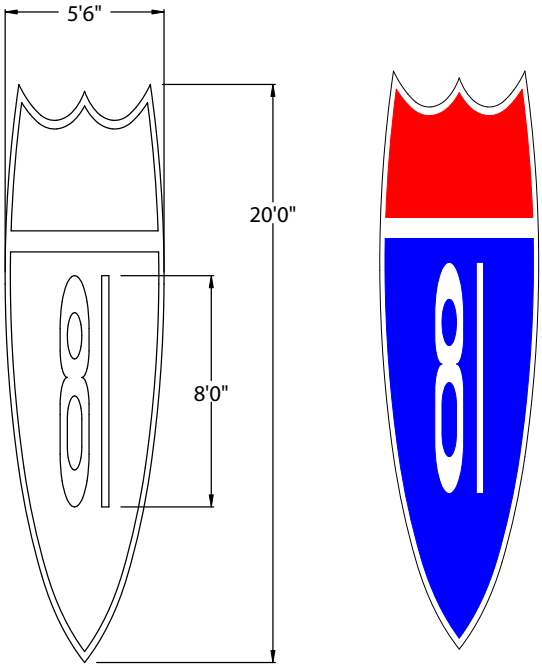

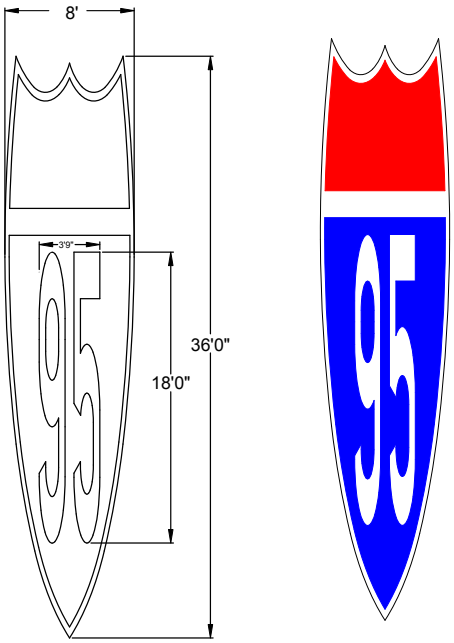

Other Sizes Available